kintech engineering

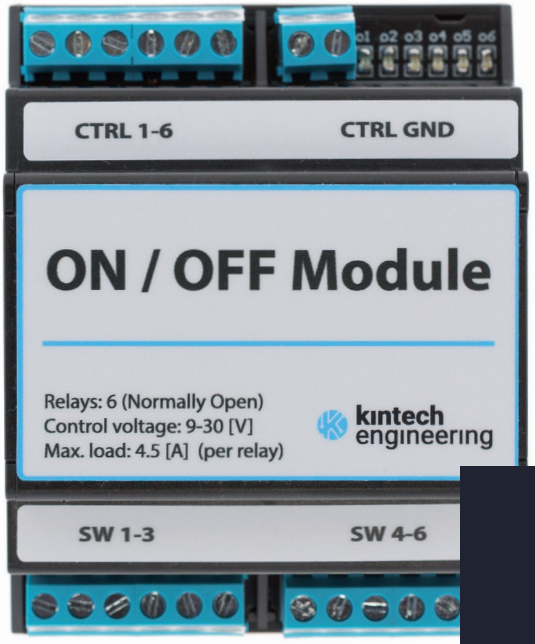

ON / OFF MODULE

Versions available: 2 relays and 6 relays

Our ON/OFF Module, used in combination with the Orbit data logger, is designed to control external power applications that may be required in certain wind or solar measurement campaigns. A good example where the ON/OFF module can be of great use is for switching a power supply system for sensor heating on and off.

The ON/OFF module allows users to control circuits by switching them on or off. The module works with the Orbit 360 Premium data logger and can be configured through Atlas. The circuits can be switched based on the values of any input channel, the UTC hour, or the user's manual settings. This adds significant flexibility when dimensioning and setting up a heating system, for example, for ultrasonic sensors in cold climates. Please note that Atlas enables implementing "OR" functions, whereas the ON/OFF module allows to implement "AND" functions by wiring two or more relays in series.

An example of a typical setup using the 2-relay version of the ON/OFF module:
If you are planning to set up a heating system that will take into account both the outside temperature AND the humidity before activating the heating system, you may order the ON/OFF module with 2 relays. If you furthermore need to control another circuit, for example, for activating an obstruction light, you should use the version with 6 relays.

For help and guidance on using or selecting one of the two available versions of the ON/OFF module, please contact us at support@kintech-engineering.com.

Specifications

Relay technology	Solid-state (SSR)
Number of relays	2 / 6
Contact type	Normally open (NO)
Control voltage	9...30V
Max. current load per relay	4.5A
Polarity	Unipolar (load current must enter the relay via H terminals and exit via L terminals)
Dimensions	92mm x 92mm x 50mm
Weight	97g

SENSOR WIRING TABLE

Pin Description		Orbit 360				
		Section	Terminal	Type		
CTRL 1-6	CT1, CT2, CT3, CT4, CT5, CT6	Analog Channels	67 71 75 79 83 89	*Output		
CTRL GND	GND	Analog Channels	47 51 55 59 64 68 72 76 80 87	(-)	Power supply system	Load
SW 1-3 SW 4-6	S1H, S2H, S3H S4H, S5H, S6H				(+)	
SW 1-3 SW 4-6	S1L, S2L, S3L S4L, S5L, S6L					(+)

FUNCTIONAL DIAGRAM

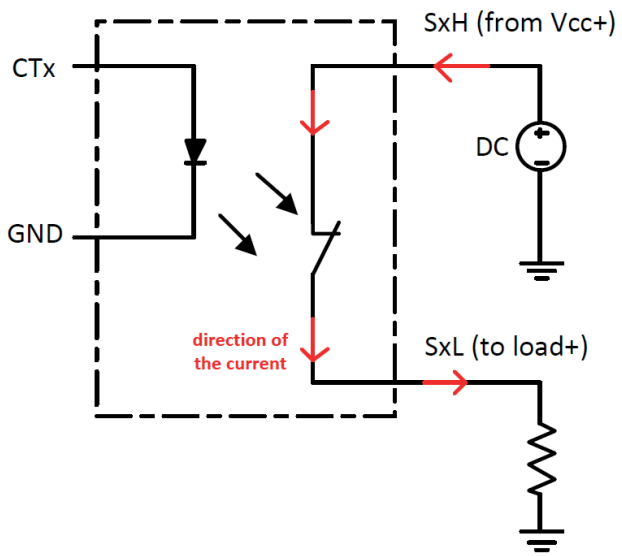

Please note the direction of the current: the current **must** enter through the H terminals and exit through the L terminals.

Last modified: 15.01.2024